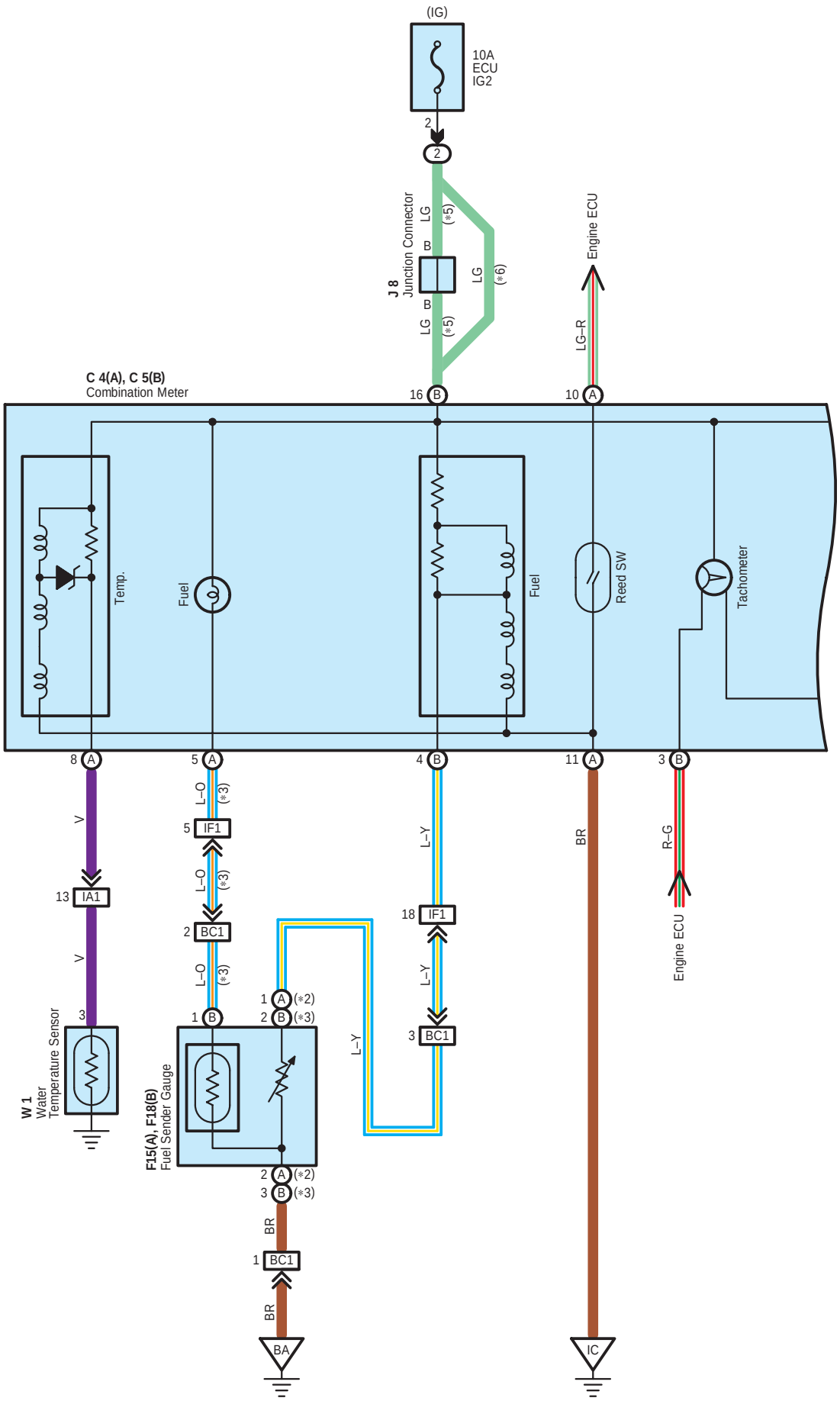
(IG)
10A
ECU
IG2
2
2
J 8
Junction Connector
LG
B
B
LG
(*5)
(*5)
LG
(*6)
Engine ECU
LG–R
C 4(A), C 5(B)
Combination Meter
16 B
10 A
Temp.
Fuel
Fuel
Reed SW
Tachometer
8 A
5 A
4 B
11 A
3 B
V
V
13 IA1
3
W 1
Water
Temperature Sensor
L–O
(*3)
5 IF1
L–O
(*3)
2 BC1
L–O
(*3)
1 B
F15(A), F18(B)
Fuel Sender Gauge
1 A (*2)
2 B (*3)
L–Y
L–Y
18 IF1
L–Y
3 BC1
BR
R–G
Engine ECU
2 A (*2)
3 B (*3)
BR
1 BC1
BR
BA
IC

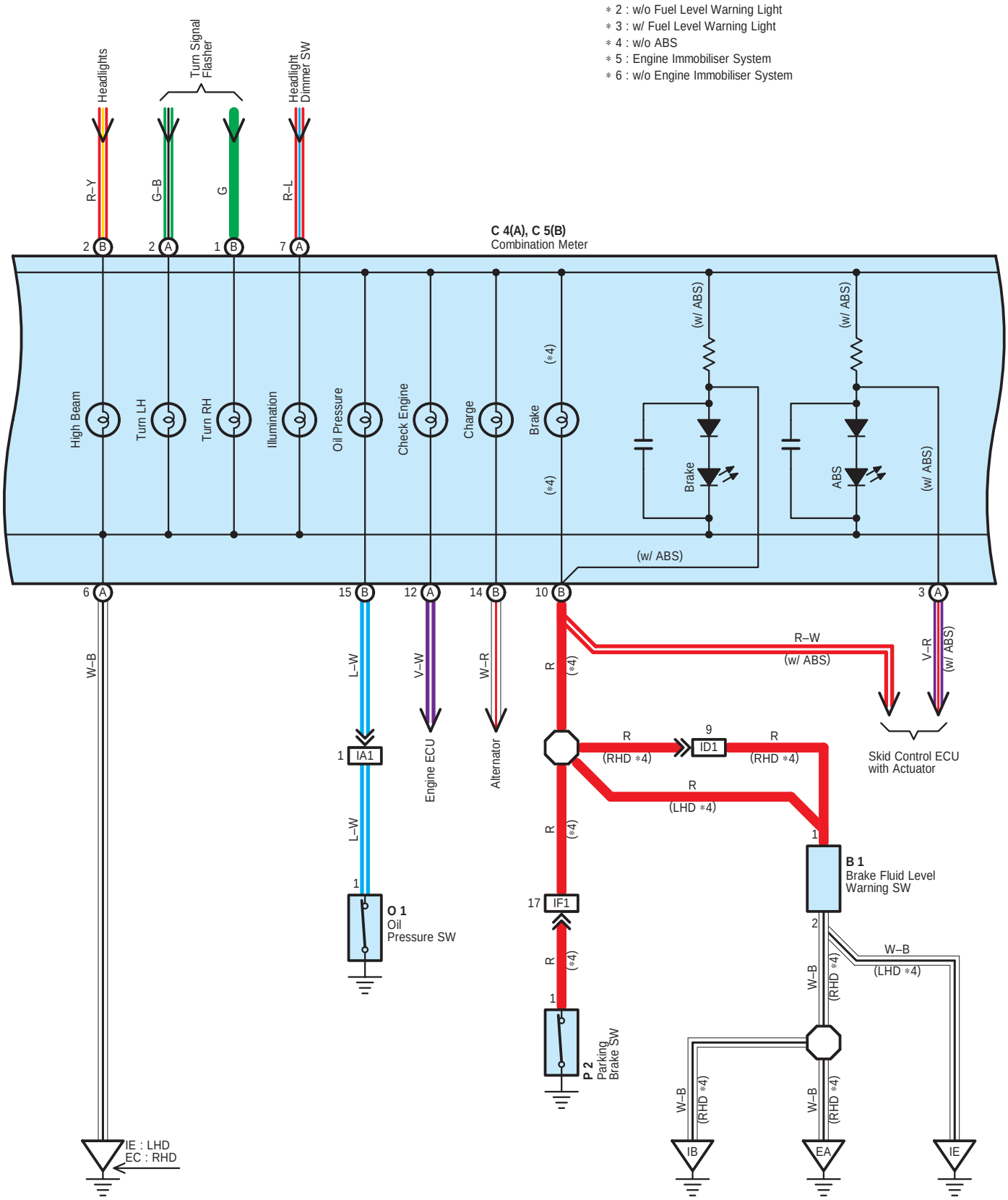
∗ 2 : w/o Fuel Level Warning Light
∗ 3 : w/ Fuel Level Warning Light
∗ 4 : w/o ABS
∗ 5 : Engine Immobiliser System
∗ 6 : w/o Engine Immobiliser System
Headlights
Turn Signal Flasher
Headlight Dimmer SW
R–Y
G–B
G
R–L
C 4(A), C 5(B)
Combination Meter
High Beam
Turn LH
Turn RH
Illumination
Oil Pressure
Check Engine
Charge
Brake
(∗4)
(w/ ABS)
Brake
ABS
W–B
L–W
V–W
W–R
R
R–W
V–R
IA1
Engine ECU
Alternator
ID1
Skid Control ECU with Actuator
(RHD ∗4)
(LHD ∗4)
O 1
Oil Pressure SW
IF1
B 1
Brake Fluid Level Warning SW
P 2
Parking Brake SW
IE : LHD
EC : RHD
IB
EA
IE

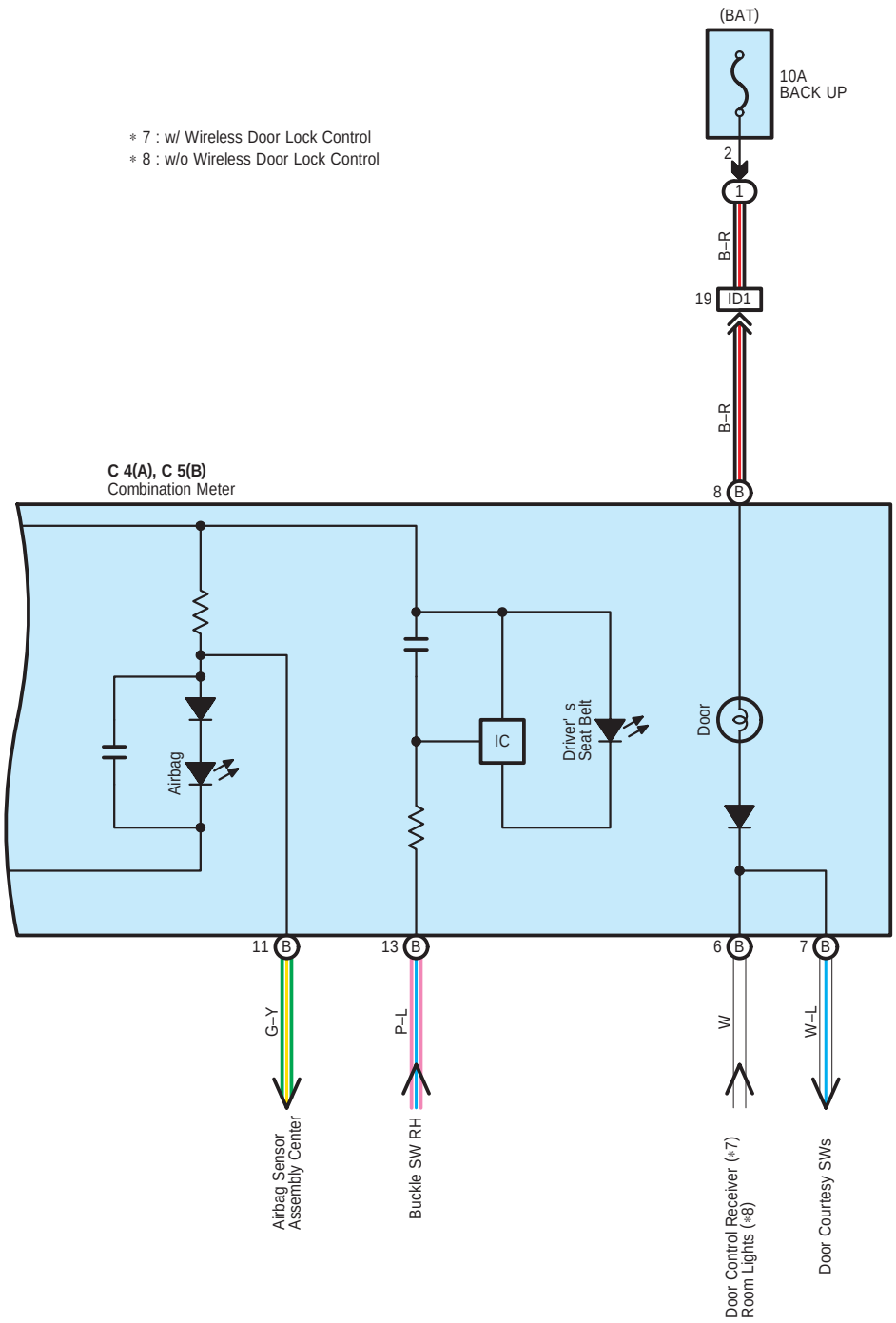
(BAT)
10A
BACK UP
2
1
B–R
19
ID1
B–R
8
B
∗ 7 : w/ Wireless Door Lock Control
∗ 8 : w/o Wireless Door Lock Control
C 4(A), C 5(B)
Combination Meter
Airbag
IC
Driver' s
Seat Belt
Door
11
B
13
B
6
B
7
B
G–Y
P–L
W
W–L
Airbag Sensor
Assembly Center
Buckle SW RH
Door Control Receiver (∗7)
Room Lights (∗8)
Door Courtesy SWs

: Parts Location

Code		See Page	Code		See Page	Code	See Page
B1		24 (*1)	F15	A	30 (LHD)	O1	35 (*4)
		26 (*2)			40 (RHD)	P2	31 (LHD)
		34 (*4)	F18	B	30 (LHD)		41 (RHD)
C4	A	28 (LHD)			40 (RHD)	W1	25 (*1)
		36 (*5)	J8		29 (LHD)		27 (*2)
		38 (*6)			37 (*5)		33 (*3)
C5	B	28 (LHD)	O1		25 (*1)		35 (*4)
		36 (*5)			27 (*2)		
		38 (*6)			33 (*3)		

: Relay Blocks

Code	See Page	Relay Blocks (Relay Block Location)
1	22	Engine Room R/B (Engine Compartment Right)
2	23 (LHD)	Fuse Block (Left Kick Panel)
	23 (RHD)	Fuse Block (Right Kick Panel)

: Connector Joining Wire Harness and Wire Harness

Code	See Page	Joining Wire Harness and Wire Harness (Connector Location)
IA1	44 (LHD)	Engine Wire and Instrument Panel Wire (Right Kick Panel)
	48 (*5)	Engine Wire and Instrument Panel Wire (Left Kick Panel)
	49 (*6)	
ID1	44 (LHD)	Engine Room Main Wire and Instrument Panel Wire (Right Kick Panel)
	48 (*5)	Engine Room Main Wire and Instrument Panel Wire (Cowl Side Panel RH)
	49 (*6)	
IF1	44 (LHD)	Instrument Panel Wire and Floor Wire (Left Kick Panel)
	48 (*5)	Instrument Panel Wire and Floor Wire (Right Kick Panel)
	49 (*6)	
BC1	45 (LHD)	Fuel Pump Wire and Floor Wire (Near the Fuel Tank)
	50 (RHD)	

: Ground Points

Code	See Page	Ground Points Location
EA	46 (*3)	Right Fender Apron
	47 (*4)	
EC	46 (*3)	Left Fender Apron
	47 (*4)	
IB	48 (*5)	Cowl Side Panel RH
	49 (*6)	
IC	44 (LHD)	Cowl Side Panel LH
	48 (*5)	Right Kick Panel
	49 (*6)	
IE	44 (LHD)	Cowl Side Panel LH
BA	45 (LHD)	Rear Quarter Panel RH
	50 (RHD)	

* 1 : LHD 3SZ–VE * 2 : LHD K3–VE * 3 : RHD 3SZ–VE * 4 : RHD K3–VE * 5 : RHD w/ Heater * 6 : RHD w/o Heater